COMET MODELS

Components required to turn this body pack into a complete tender:
TC3 7'6" x 7'6" tender chassis
TF1 Tender frame kit
3 axles 4'3" Stanier tender wheels (WH35)

TB1 Tender Body Pack LMS Stanier 4000 Gallon Riveted Sides

This body pack is intended for use with our tender frame kit TF1 but can also be used for scratchbuilding or to improve an RTR tender.

The riveted version of the Stanier 4000 gallon/9 tons coal tender was allocated to some Black 5s, many Jubilees, all Royal Scots and roughly half the 8F 2-8-0s.

The tender underframe had standard axleboxes but note that the water sieve boxes supplied in pack TF1 were not fitted, at least in any photographs that we have seen. Please note that pictures showing sieves fitted to the tenders of Black 5's will, on closer inspection, be found to be the later part welded version, item TB3.

A listing showing the types of tender first allocated to all the Stanier/Ivatt Black 5 locomotives is available from this product's page on the Wizard Models website.

Parts list - Etchings

1. Front bulkhead
2. Tank rear
3. Tank rear overlay
4. Sides
5. Tank top
6. Bunker base
7. Rear bulkhead
8. Nearside bunker side
9. Offside bunker side
10. Front platform inner support
11. Front platform
12. Lifting rings
13. Lifting ring bases

Parts list - Castings etc.

Tender front
Water gauge
Dome
Tank filler
Fire iron tunnel
Tank vents (2)
Handrail knobs (6)
Handrail wire (2)

Assembly Sequence

Note: Make all folds with the half-etch to the inside of the fold unless stated otherwise. The instructions assume that the body will be built onto the tender base from our frame kit TF1, which should be completed up to step (8) in the TF1 instructions. It is advisable to add whitemetal castings to both the frames and superstructure only when all hard soldering of etched parts has been completed.

1. Fold up and solder the front bulkhead etch (1), locating to the tender base by the tabs on its lower edge. Check that it is square to the frame in all directions. You may need to file a small notch each side of the base to ensure clearance from the flanges of the front wheels.

2. Fold out the step treads from the tank rear (2) then fold up and solder this to the tender base, tack soldering at the sides only. Again, check for squareness and when satisfied locate the tank rear overlay (3) by placing its lower edge onto the tank base first, then locating the step treads through the slots in the overlay and lastly pressing the overlay tight against the tank rear. Complete the soldering of these items, then file back the vertical edges flush with the tank rear.

3. Check the fit of the tender sides against the front bulkhead. You may find the top bend needs easing slightly for a perfect fit. Before soldering the sides in place, fold up the front platform (11) and ensure that it will fit between the front edges of the sides - it may be necessary to ease the front bends slightly to achieve this. When satisfied, locate the tabs along the bottom edges of the sides into the slots in the tender base and solder in position (sketch 1).

4. If you wish to model the coal bunker fully, fold up the tank top (5) as per the sketch - note that the front bend is made with the half-etch to the outside. Slide the tank top into position - the rear end rests on the top return of the tank rear and the front on the lower edge of the cut-out in the front bulkhead, with the intermediate supports resting on the tank base. When satisfied, solder in position (sketches 3 & 5). Alternatively, if you intend to model the tender coaled up simply bend down the intermediate supports only. In this case the front of the tank top is supported by the horizontal return of the front bulkhead. Again, slide into position and solder (sketch 2).

5. Fold the bunker base (6) to the angle shown in the sketch and fit in position, but do not solder it yet. Now locate the rear bulkhead (7) in place on the tank top and hold it tight against the top fold of the bunker base. If necessary, adjust the angle of the fold until the rear bulkhead is vertical then solder both parts in place (sketch 3).

6. If you have decided to model the coal bunker fully, locate and solder in place the nearside bunker side (8). Bend the top of the offside bunker side (9) so that when in position with the top touching the tender side, the top is approximately horizontal (sketch 4). When satisfied, solder in place. If the bunker is not to be fully modelled discard part 9 and modify the nearside bunker side (8) by separating along the half-etched line. Discard the smaller piece and solder the larger one in place as per the sketch. The tender assembly can now be washed to remove flux residues before proceeding further (sketches 2 & 3).

7. Fold the front platform inner support (10) to shape and solder to the underside of the front platform (11), making sure the top edges of the former are located in the inner half-etched lines of the latter, and that the inner support is the correct way up. File a notch in both the inner front platform etch and the base of the tender front casting to clear the tender chassis/frame fixing screw. Fettle the tender front casting and check for fit against the front bulkhead - it should slide into position between the front edges of the tender sides. With the tender front casting in position (but not fixed) slide the front platform up to it and check the fit - the brake and water scoop covers should fit

snugly on top of the platform. Fettle as required and when satisfied fix in position with adhesive, since you may find it difficult to make a hidden or neat solder joint.

8. The remaining detail may be added in any order as per the sketches. The water scoop and brake operating handles are made from handrail knobs and 0.45mm wire as per the sketch (sketch 6 and below).

This completes the assembly of the tender body, and detailing of the underframe can now be completed as described in the TF1 instructions.

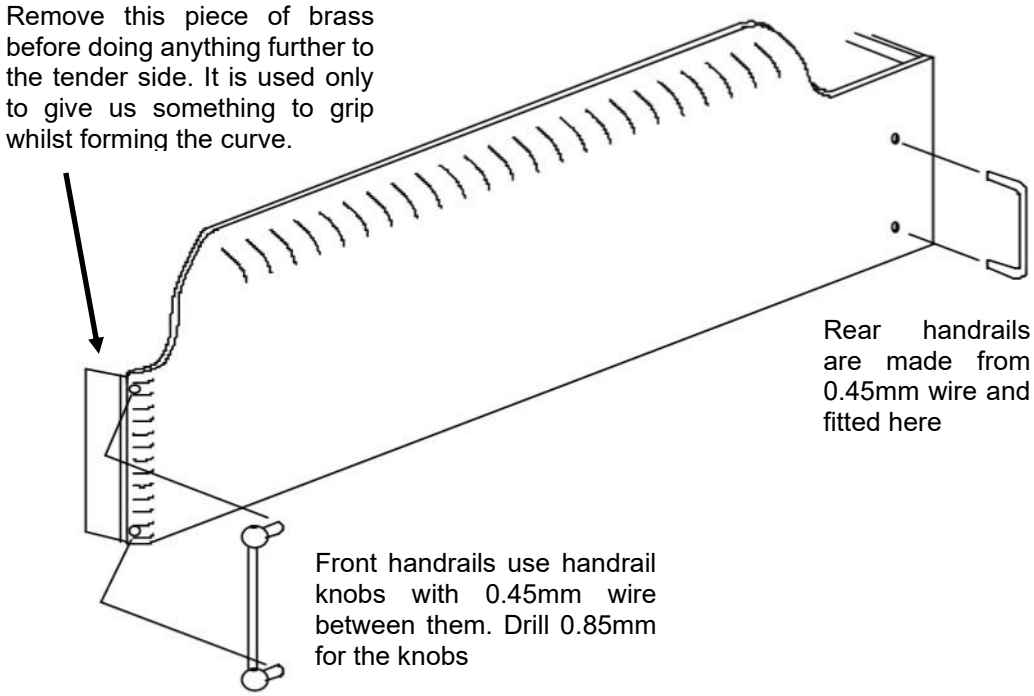

Please note that the lamp irons, works plate and capacity plate are not provided. We make the lamp irons from 'Bambi' staples cut in half. The works and capacity plates are available from other manufacturers.

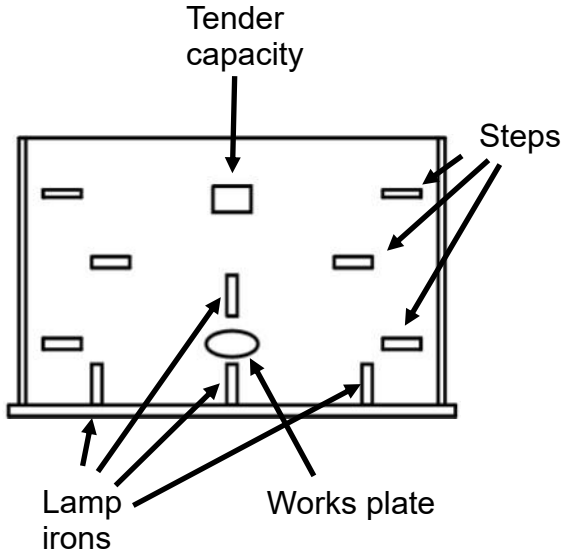

Tender rear view

Comet Models is part of Wizard Models Limited, PO Box 70, Barton upon Humber DN18 5XY
Tel 01652 635885, web www.wizardmodels.ltd, e-mail info@wizardmodels.ltd

© Wizard Models Limited 2026

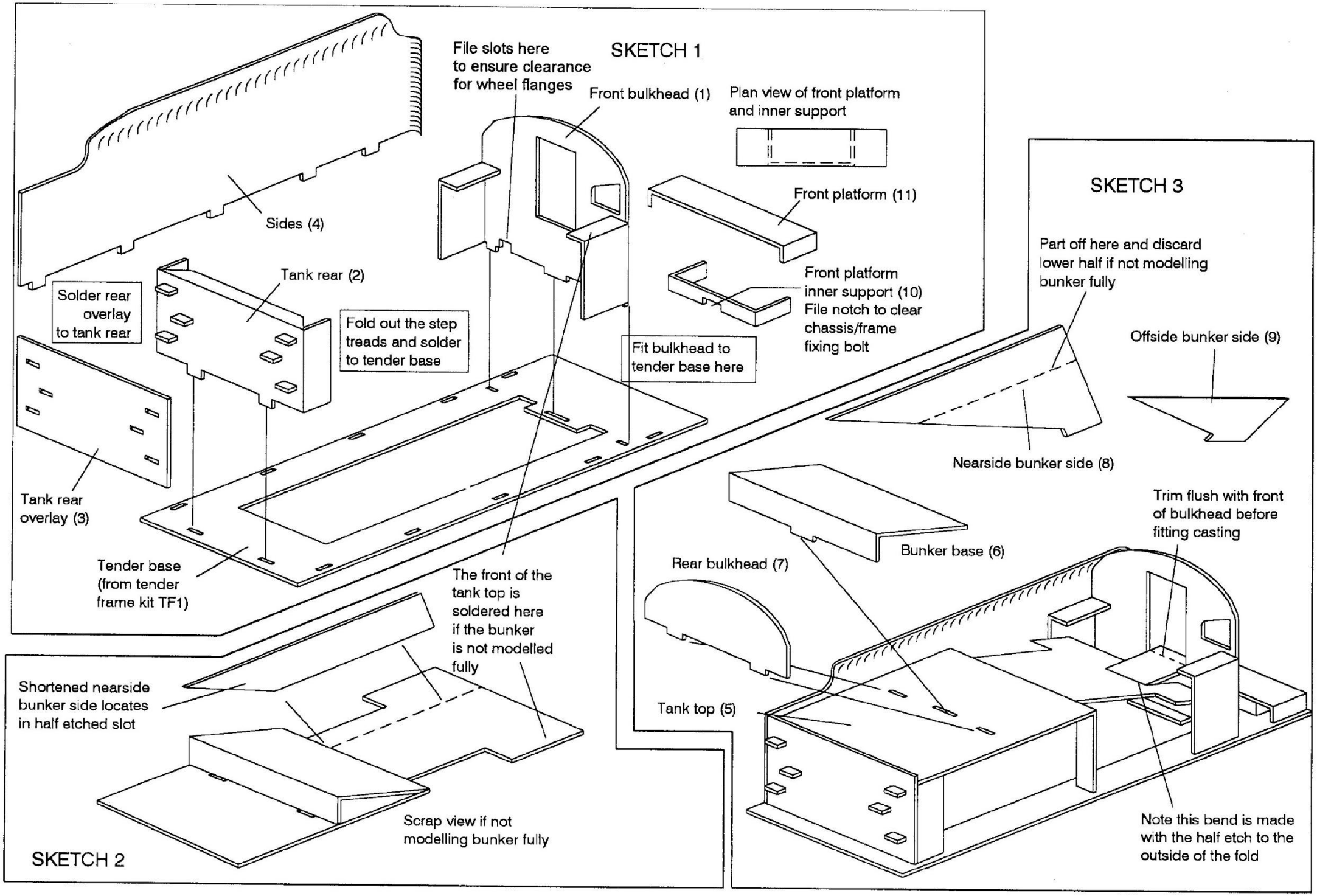
SKETCH 1
File slots here to ensure clearance for wheel flanges
Front bulkhead (1)
Plan view of front platform and inner support
Front platform (11)
Sides (4)
Tank rear (2)
Solder rear overlay to tank rear
Fold out the step treads and solder to tender base
Front platform inner support (10) File notch to clear chassis/frame fixing bolt
Fit bulkhead to tender base here
Tank rear overlay (3)
Tender base (from tender frame kit TF1)
SKETCH 3
Part off here and discard lower half if not modelling bunker fully
Offside bunker side (9)
Nearside bunker side (8)
Bunker base (6)
Trim flush with front of bulkhead before fitting casting
Rear bulkhead (7)
The front of the tank top is soldered here if the bunker is not modelled fully
Shortened nearside bunker side locates in half etched slot
Tank top (5)
Scrap view if not modelling bunker fully
SKETCH 2
Note this bend is made with the half etch to the outside of the fold

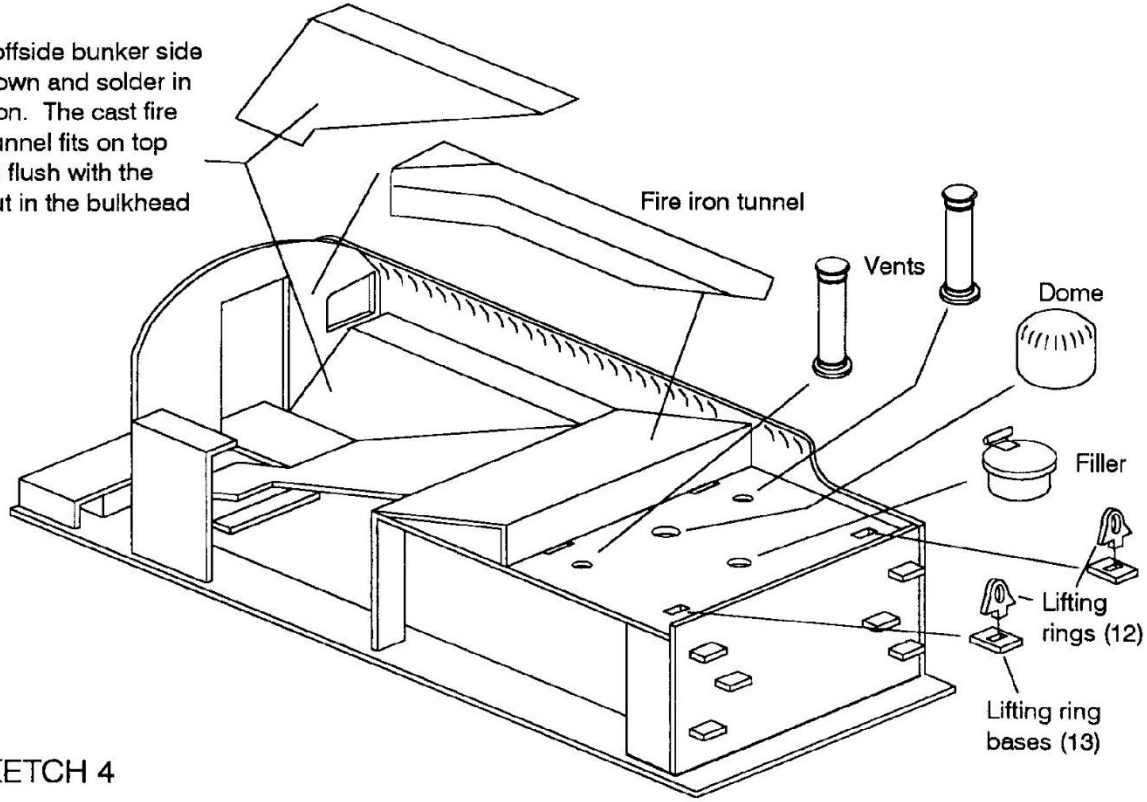

SKETCH 4

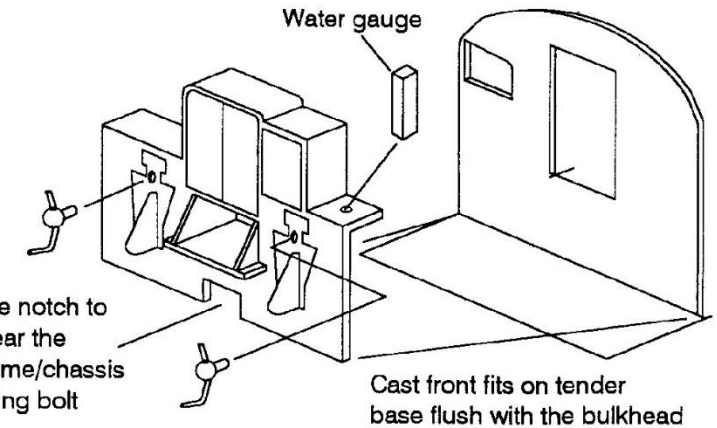

SKETCH 6

Make water scoop and brake handles from handrail knobs and wire Overall length of handles is 7mm

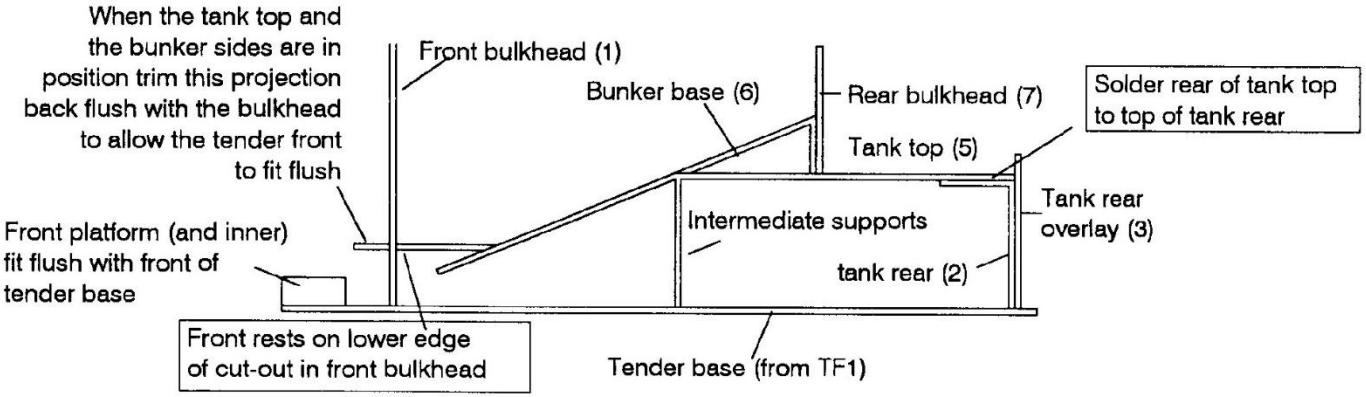

Disposition of tank top (5) if modelling the coal bunker fully

SKETCH 5